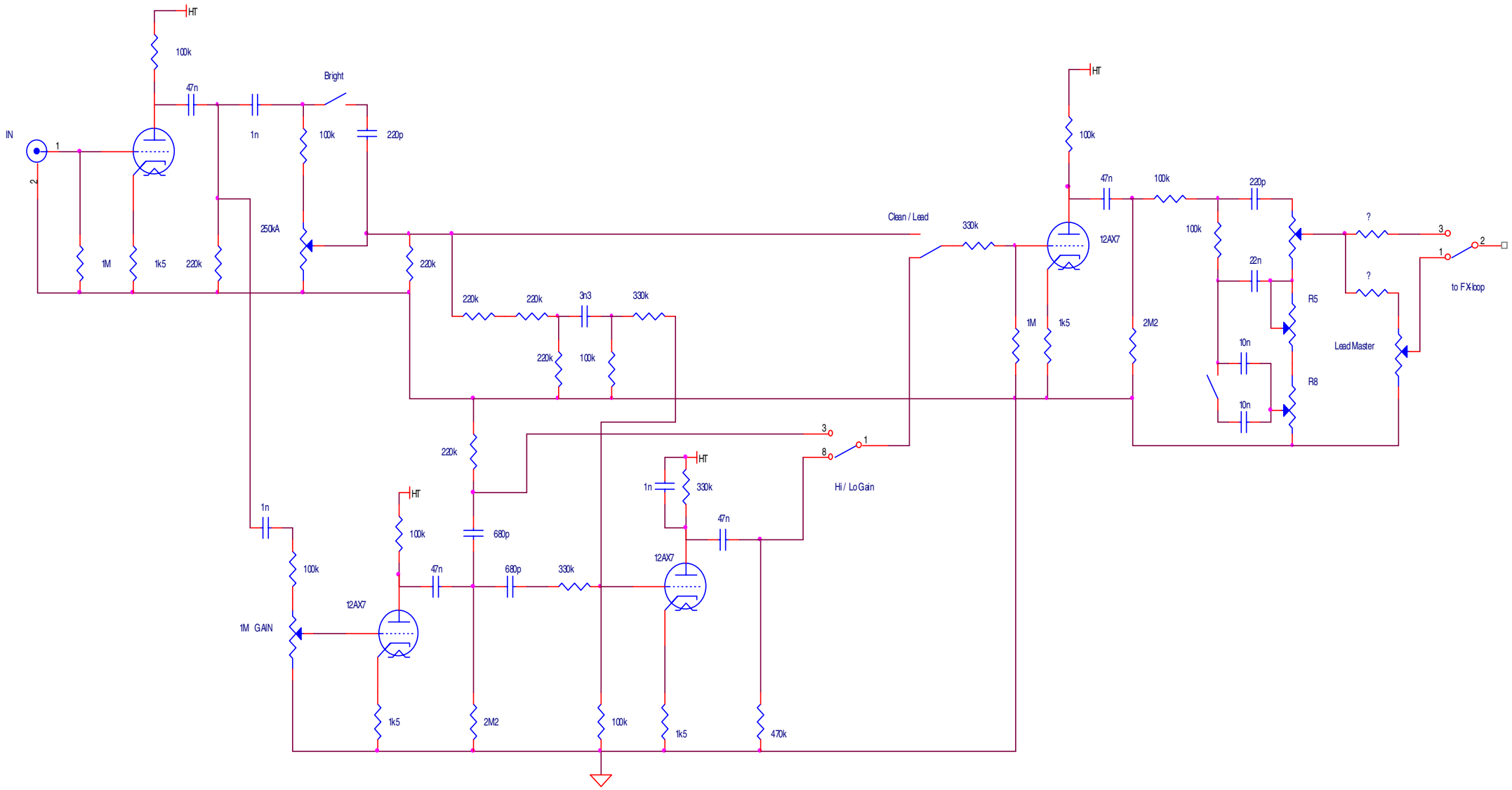
HT
100k
47n
Bright
IN
1
2
1n
100k
220p
1M
1k5
220k
250kA
220k
220k
220k
3n3
330k
220k
100k
Clean / Lead
330k
HT
100k
47n
100k
220p
12AX7
100k
22n
R5
?
?
3
2
1
to FX loop
1M
1k5
2M2
10n
R8
Lead Master
10n
3
1
8
Hi / Lo Gain
220k
HT
1n
330k
47n
12AX7
1n
100k
HT
100k
680p
47n
680p
330k
12AX7
1M GAIN
1k5
2M2
100k
1k5
470k